HP-F2003 FUSE BLOCK P.C. BOARD TYPE

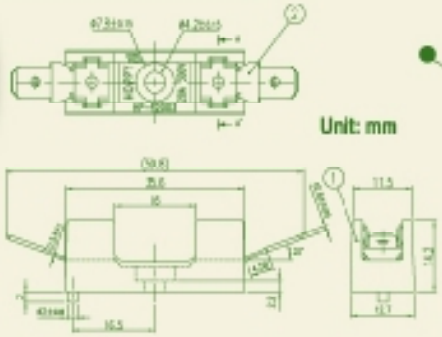

Specifications

1	Fuse Size	ø6.35 X30mm /ø6.35 X31.75mm
2	Maximum Rating	20A 300V
3	Dielectric Strength	AC 2500V 1minute
4	Insulation Resistance	DC 500V 5mΩ Min.
5	Approval	UL

WL-210A FUSE CLIP P.C. BOARD TYPE

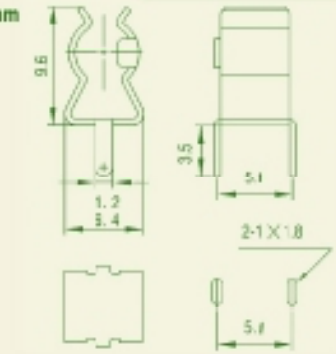

Specifications

1	Fuse Size	ø5.2 X 20mm
2	Maximum Rating	10A 250V
3	Material	Spring Brass
4	Finish	Tin-Plated
5	Material Thickness	0.4t

WL-210D FUSE CLIP P.C. BOARD TYPE

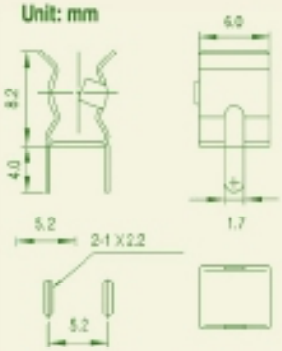

Specifications

1	Fuse Size	ø5.2 X 20mm
2	Maximum Rating	10A 250V
3	Material	Phosphor Bronze
4	Finish	Tin-Plated
5	Material Thickness	0.3t

WL-211 FUSE CLIP P.C. BOARD TYPE

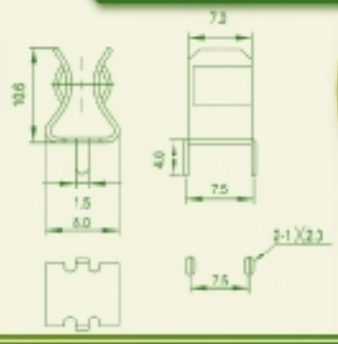

Specifications

1	Fuse Size	ø6.35 X 30mm /ø6.35 X 31.75mm
2	Maximum Rating	15A 250V
3	Material	Spring Brass
4	Finish	Tin-Plated
5	Material Thickness	0.5t

PDF created with pdfFactory Pro trial version www.pdffactory.com